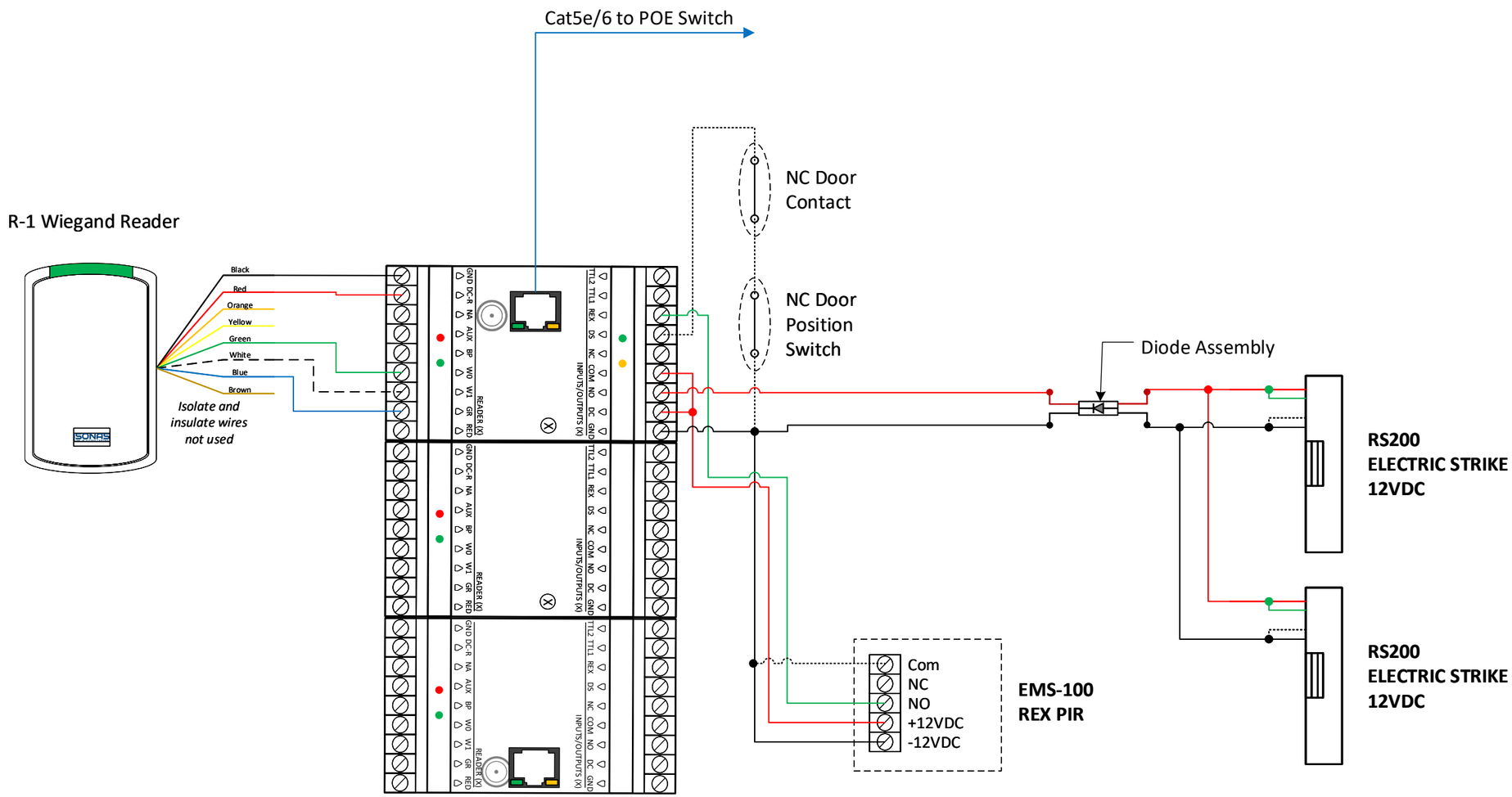

ISONAS
PURE IP ACCESS CONTROL

IPB V2.0.POE.2xRS200.REX.DSM			
Dwg No:		Sheet 1	of 1
Date: 1-20-21	Drawn By: DT	Version: 1.0	